Factory-Verified Replacement

MERYDOM KUD02235-030ZA15-900-000

Certified for interchange with Liebherr KUD02235-030ZA15-900-000. This document consolidates the public product record, complete published specifications, technical media, source traceability and engineering confirmation notes.

LEVEL 3 - MERYDOM ENGINEERING VERIFIED

Reviewed by MERYDOM Engineering Department. Final application approval must confirm loads, duty cycle, mounting rigidity, bolt capacity, lubrication and operating conditions.

MERYDOM MODEL

KUD02235-030ZA15-900-000

REFERENCE

Liebherr KUD02235-030ZA15-900-000

SERIES

KUD_30_ZA Series

STRUCTURE

Cuscinetto a sfere a due corone

OVERALL OD

2,457.6 mm

OVERALL ID

2,115 mm

OVERALL HEIGHT

120 mm

GEAR

Dentatura esterna

Published Technical Drawing

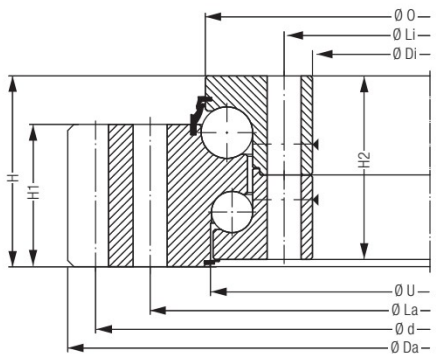

liebherr-page-102-drawing.webp

Complete Product Data

All values below are generated from the current public verified replacement record. Source values are retained and metric references are shown where available.

MERYDOM CERTIFIED PRODUCT	
Product brand	MERYDOM
MERYDOM model	KUD02235-030ZA15-900-000
Certified interchangeable with	Liebherr KUD02235-030ZA15-900-000
Verification status	Level 3 - MERYDOM Engineering Verified
Reviewed by	MERYDOM Engineering Department
Public record UID	BU32YTGBAU7TUCXXAWQFNDQILS
MATERIALS	
Configurable ring material options	42CrMo / 50Mn
Seal material	NBR - Nitrile rubber
Configurable spacer material options	Engineering nylon / Brass
IDENTIFICATION	
Reference brand	Liebherr
Reference series	KUD_30_ZA Series
Reference model	KUD02235-030ZA15-900-000
Bearing structure	Cuscinetto a sfere a due corone
Gear arrangement	Dentatura esterna
DIMENSION	
Mass (Weight)	827 kg
Overall outside diameter (Da)	2.457,6 mm
Overall inside diameter (Di)	2.115 mm

Complete Product Data

All values below are generated from the current public verified replacement record. Source values are retained and metric references are shown where available.

DIMENSION (CONTINUED)	
Overall height (H)	120 mm
Liebherr catalogue dimension O (O)	2.264 mm
Liebherr catalogue dimension U (U)	2.258 mm
Liebherr catalogue dimension H1 (H1)	91 mm
Liebherr catalogue dimension H2 (H2)	114 mm
MOUNTING	
Outer ring bolt circle (La)	2.345 mm
Inner ring bolt circle (Li)	2.160 mm
La/Li mounting-hole count (n)	52
Mounting fastener specification (M)	24
Liebherr catalogue count n1 (n1)	4
GEAR	
Gear pitch diameter (d)	2.424 mm
Gear module (m)	12 mm
Gear tooth count (z)	202
Addendum modification product x*m (x*m)	6 mm
Liebherr catalogue gear dimension k*m (k*m)	-1,2 mm
Gear face width (b)	91 mm
PERFORMANCE	
Standard tooth force (Fz standard)	100,2 kN

Complete Product Data

All values below are generated from the current public verified replacement record. Source values are retained and metric references are shown where available.

PERFORMANCE (CONTINUED)	
Maximum tooth force (Fz maximum)	200,4 kN
Static load rating (Cstat)	13.125 kN
Dynamic load rating (Cdyn)	914 kN
PERFORMANCE RATINGS	
Rating Dynamic	914 kN | Not simultaneous with other listed dynamic ratings
Rating Static	13.125 kN | Not simultaneous with other listed dynamic ratings
Rating Tooth Force Max	200,4 kN | Not simultaneous with other listed dynamic ratings
Rating Tooth Force Standard	100,2 kN | Not simultaneous with other listed dynamic ratings
MOUNTING INTERFACES	
Outer ring mounting	52 holes - 24
Inner ring mounting	52 holes - 24
GEAR INTERFACE	
Pitch system	module
Module reference	12 mm
Number of teeth	202
SOURCE TRACEABILITY	
Source document code	LIEBHERR-SLEWING-BEARINGS-PRODUCT-CATALOGUE-2018
Source file	liebherr-slewing-bearings-product-catalogue-pt-metric-web.pdf
PDF page	102
Printed page	102

Complete Product Data

All values below are generated from the current public verified replacement record. Source values are retained and metric references are shown where available.

SOURCE TRACEABILITY (CONTINUED)	
Source language	EN
Original unit system	Mixed_metric_dp_threads
PUBLISHED TECHNICAL MEDIA	
Load Curve Chart	liebherr-page-102-curve.webp | SHA-256: 3dfe4916ed0610c39f734962122043982a4b13e405d8f02167f6419bfe799112
Outline Drawing	liebherr-page-102-drawing.webp | SHA-256: 4a806c28fda03798ac018473b4178af54a82b8ab4c6a845f14d933932057559c

Published Load / Performance Chart

Use the published chart as a preliminary selection aid only. The model legend, curve family and source document must be reviewed together with the operating load case.

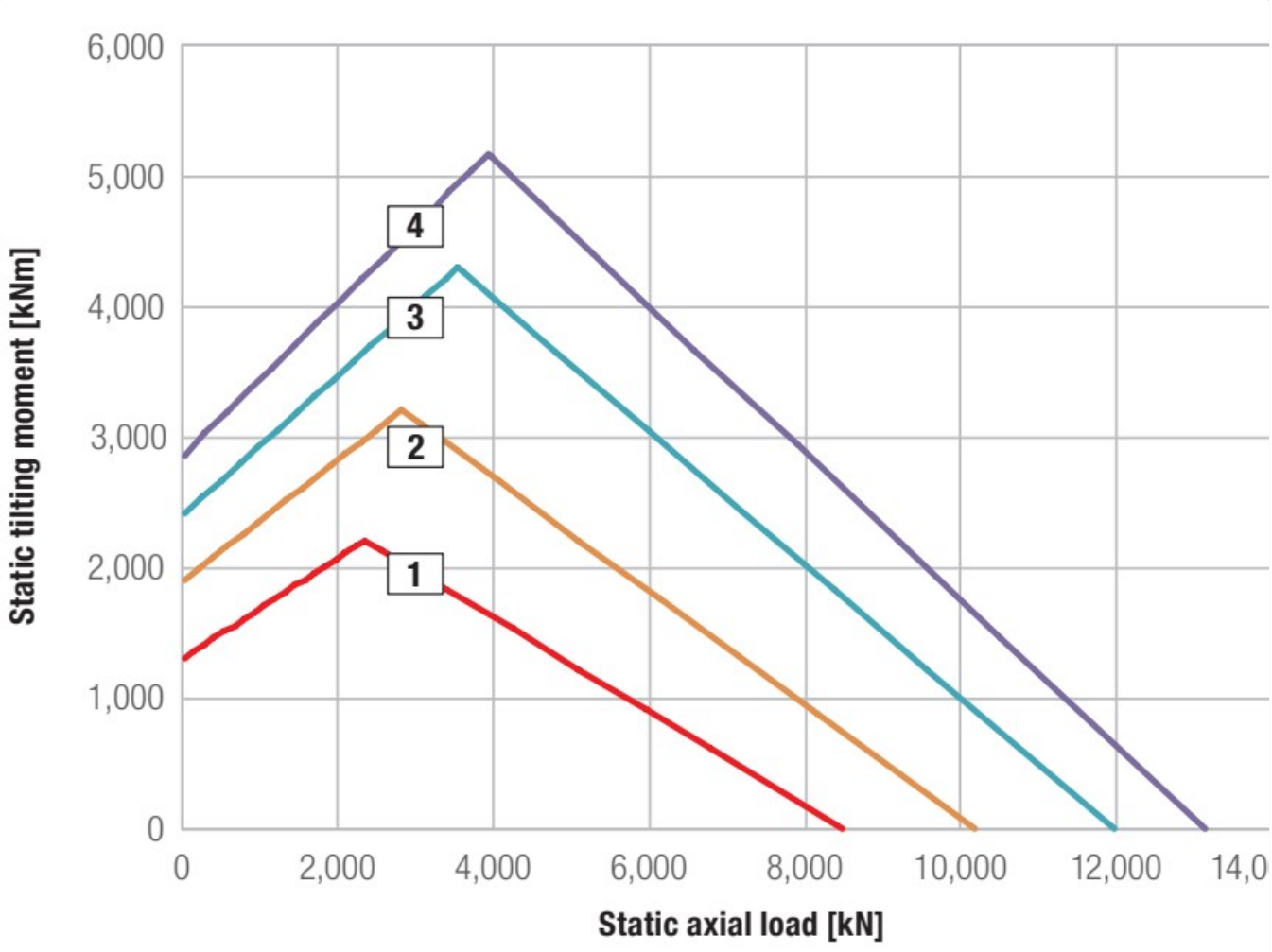

liebherr-page-102-curve.webp | SHA-256: 3dfe4916ed0610c39f734962122043982a4b13e405d8f02167f6419bfe799112

Engineering note: final approval must also consider mounting rigidity, bolt capacity, duty cycle, lubrication, temperature, environment and installation conditions.

Source and Verification Traceability

PUBLIC RECORD UID

BU32YTGBAU7TUCXXAWQFNDQILS

SOURCE DOCUMENT

LIEBHERR-SLEWING-BEARINGS-PRODUCT-CATALOGUE-2018

SOURCE FILE

liebherr-slewing-bearings-product-catalogue-pt-metric-web.pdf

SOURCE LOCATION

PDF page 102 | Printed page 102

VERIFICATION

Level 3 - MERYDOM Engineering Verified

REVIEWED BY

MERYDOM Engineering Department

Engineering Confirmation Boundary

1. Confirm the exact model designation and all installation-envelope dimensions.
2. Confirm mounting-hole quantity, bolt circle, hole specification, bolt grade and preload.
3. Confirm gear arrangement, pitch system, tooth count, backlash and mating-pinion data.
4. Confirm axial, radial and moment loads, load combinations, duty cycle and required life.
5. Confirm support flatness and stiffness, lubrication, sealing, temperature and environment.
6. Final drawing revision, manufacturing tolerances and documentation package are confirmed with the quotation.

Request Price, Delivery and Final Engineering Confirmation

Email: jovi@merydom.com | Email: andi@merydom.com | WhatsApp: +86 17705201170

Product page:
https://rotnex.com/it/prodotti/cuscinetti-di-rotazione-sostitutivi/liebherr/kud02235-030za15-900-000/

Trademark and legal notice: referenced brand and model names are used only for identification and cross-reference. MERYDOM is an independent manufacturer and is not affiliated with or endorsed by the referenced brand unless expressly stated.