Factory-Verified Replacement

MERYDOM 0750I-12R-100

Certified for interchange with Tibet Makina 0750I-12R-100. This document consolidates the public product record, complete published specifications, technical media, source traceability and engineering confirmation notes.

LEVEL 3 - MERYDOM ENGINEERING VERIFIED

Reviewed by MERYDOM Engineering Department. Final application approval must confirm loads, duty cycle, mounting rigidity, bolt capacity, lubrication and operating conditions.

MERYDOM MODEL

0750I-12R-100

REFERENCE

Tibet Makina 0750I-12R-100

SERIES

SINGLE_ROW_ROLLER_INTERNAL Series

STRUCTURE

Single Row Roller

OVERALL OD

870 mm

OVERALL ID

580 mm

OVERALL HEIGHT

80 mm

GEAR

Dentatura interna

Published Technical Drawing

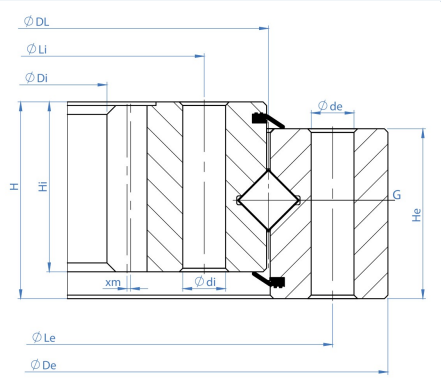

single_row_roller_internal-drawing.webp

Complete Product Data

All values below are generated from the current public verified replacement record. Source values are retained and metric references are shown where available.

MERYDOM CERTIFIED PRODUCT	
Product brand	MERYDOM
MERYDOM model	0750I-12R-100
Certified interchangeable with	Tibet Makina 0750I-12R-100
Verification status	Level 3 - MERYDOM Engineering Verified
Reviewed by	MERYDOM Engineering Department
Public record UID	VJCWY75GTN7FYYADOIB7TIHUPW
MATERIALS	
Configurable ring material options	42CrMo / 50Mn
Seal material	NBR - Nitrile rubber
Configurable spacer material options	Engineering nylon / Brass
IDENTIFICATION	
Reference brand	Tibet Makina
Reference series	SINGLE_ROW_ROLLER_INTERNAL Series
Reference model	0750I-12R-100
Bearing structure	Single Row Roller
Gear arrangement	Dentatura interna
DIMENSION	
Mass (Kg)	160 kg
Overall outside diameter (De)	870 mm
Overall inside diameter (Di)	580 mm

Complete Product Data

All values below are generated from the current public verified replacement record. Source values are retained and metric references are shown where available.

DIMENSION (CONTINUED)	
Overall height (H)	80 mm
Outer ring height (He)	70 mm
Inner ring height (Hi)	70 mm
MOUNTING	
Outer ring bolt circle (Le)	825 mm
Inner ring bolt circle (Li)	675 mm
Outer ring mounting-hole count (ne)	28
Inner ring mounting-hole count (ni)	28
Outer ring mounting-hole specification (de)	22 mm
Inner ring mounting-hole specification (di)	22 mm
GEAR	
Gear module (m)	10 mm
Gear tooth count (z)	60
PERFORMANCE	
Normal tooth force (Ft_normal)	54 kN
Maximum tooth force (Ft_max)	108 kN
MISCELLANEOUS	
Raceway Pitch Diameter (DL)	750 mm
Lubrication Zerk Count (G)	4
PERFORMANCE RATINGS	
Rating Tooth Force Normal	54 kN | Not simultaneous with other listed dynamic ratings

Complete Product Data

All values below are generated from the current public verified replacement record. Source values are retained and metric references are shown where available.

PERFORMANCE RATINGS (CONTINUED)	
Rating Tooth Force Max	108 kN | Not simultaneous with other listed dynamic ratings
MOUNTING INTERFACES	
Outer ring mounting	28 holes - de 22 mm
Inner ring mounting	28 holes - di 22 mm
GEAR INTERFACE	
Pitch system	module
Module reference	10 mm
Number of teeth	60
SOURCE TRACEABILITY	
Source document code	TIBET_MAKINA_2015_CATALOG
Source file	tibet_makina_2015.pdf
PDF page	47
Printed page	47
Source language	TR-EN
Original unit system	Metric
PUBLISHED TECHNICAL MEDIA	
Load Curve Chart	single_row_roller_internal-static-load-curve.webp | SHA-256: 1f57508e685a83933fc18281b8a2ce4b69c6233031f8746fafe5dacc09fbdab5
Outline Drawing	single_row_roller_internal-drawing.webp | SHA-256: db33cdc438473d3e76b0d23fbe532e652ffa924a88fee3b09c42671e6ddba95b

Published Load / Performance Chart

Use the published chart as a preliminary selection aid only. The model legend, curve family and source document must be reviewed together with the operating load case.

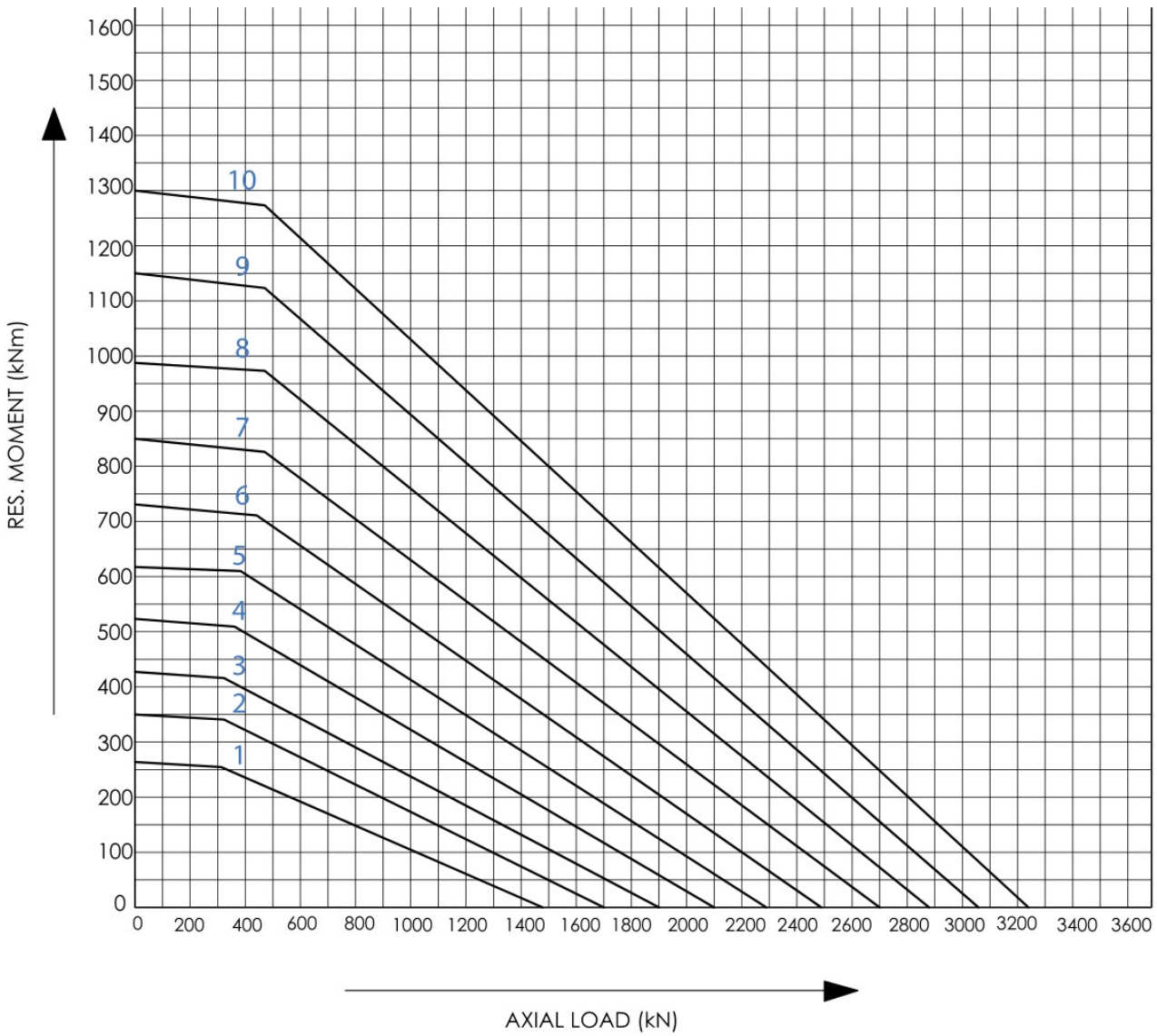

single_row_roller_internal-static-load-curve.webp | SHA-256: 1f57508e685a83933fc18281b8a2ce4b69c6233031f8746fafe5dacc09fbdab5

Engineering note: final approval must also consider mounting rigidity, bolt capacity, duty cycle, lubrication, temperature, environment and installation conditions.

Source and Verification Traceability

PUBLIC RECORD UID

VJCWY75GTN7FYYADOIB7TIHUPW

SOURCE DOCUMENT

TIBET_MAKINA_2015_CATALOG

SOURCE FILE

tibet_makina_2015.pdf

SOURCE LOCATION

PDF page 47 | Printed page 47

VERIFICATION

Level 3 - MERYDOM Engineering Verified

REVIEWED BY

MERYDOM Engineering Department

Engineering Confirmation Boundary

1. Confirm the exact model designation and all installation-envelope dimensions.
2. Confirm mounting-hole quantity, bolt circle, hole specification, bolt grade and preload.
3. Confirm gear arrangement, pitch system, tooth count, backlash and mating-pinion data.
4. Confirm axial, radial and moment loads, load combinations, duty cycle and required life.
5. Confirm support flatness and stiffness, lubrication, sealing, temperature and environment.
6. Final drawing revision, manufacturing tolerances and documentation package are confirmed with the quotation.

Request Price, Delivery and Final Engineering Confirmation

Email: jovi@merydom.com | Email: andi@merydom.com | WhatsApp: +86 17705201170

Product page: https://rotnex.com/it/prodotti/cuscinetti-di-rotazione-sostitutivi/tibet-makina/0750i-12r-100/

Trademark and legal notice: referenced brand and model names are used only for identification and cross-reference. MERYDOM is an independent manufacturer and is not affiliated with or endorsed by the referenced brand unless expressly stated.