Factory-Verified Replacement

MERYDOM 0941E-12B-200

Certified for interchange with Tibet Makina 0941E-12B-200. This document consolidates the public product record, complete published specifications, technical media, source traceability and engineering confirmation notes.

LEVEL 3 - MERYDOM ENGINEERING VERIFIED

Reviewed by MERYDOM Engineering Department. Final application approval must confirm loads, duty cycle, mounting rigidity, bolt capacity, lubrication and operating conditions.

MERYDOM MODEL

0941E-12B-200

REFERENCE

Tibet Makina 0941E-12B-200

SERIES

DOUBLE_ROW_BALL_EXTERNAL Series

STRUCTURE

ift s ral bilyal rulman

OVERALL OD

1,100 mm

OVERALL ID

835 mm

OVERALL HEIGHT

102 mm

GEAR

D tan di li

Published Technical Drawing

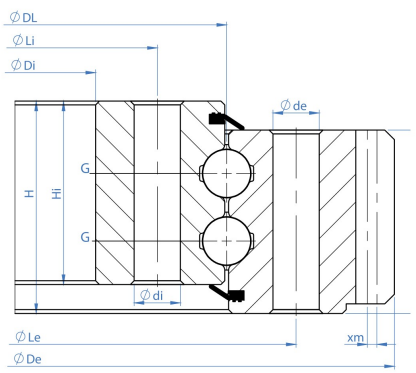

double_row_ball_external-drawing.webp

Complete Product Data

All values below are generated from the current public verified replacement record. Source values are retained and metric references are shown where available.

MERYDOM CERTIFIED PRODUCT	
Product brand	MERYDOM
MERYDOM model	0941E-12B-200
Certified interchangeable with	Tibet Makina 0941E-12B-200
Verification status	Level 3 - MERYDOM Engineering Verified
Reviewed by	MERYDOM Engineering Department
Public record UID	77NR7QTIK7WA6THMAWAMB6M4TX
MATERIALS	
Configurable ring material options	42CrMo / 50Mn
Seal material	NBR - Nitrile rubber
Configurable spacer material options	Engineering nylon / Brass
IDENTIFICATION	
Reference brand	Tibet Makina
Reference series	DOUBLE_ROW_BALL_EXTERNAL Series
Reference model	0941E-12B-200
Bearing structure	ift s ral bilyal rulman
Gear arrangement	D tan di li
DIMENSION	
Mass (Kg)	250 kg
Overall outside diameter (De)	1 100 mm
Overall inside diameter (Di)	835 mm

Complete Product Data

All values below are generated from the current public verified replacement record. Source values are retained and metric references are shown where available.

DIMENSION (CONTINUED)	
Overall height (H)	102 mm
Outer ring height (He)	92 mm
Inner ring height (Hi)	92 mm
MOUNTING	
Outer ring bolt circle (Le)	1 013 mm
Inner ring bolt circle (Li)	873 mm
Outer ring mounting-hole count (ne)	36
Inner ring mounting-hole count (ni)	36
Outer ring mounting-hole specification (de)	21 mm
Inner ring mounting-hole specification (di)	21 mm
GEAR	
Gear module (m)	10 mm
Gear tooth count (z)	108
PERFORMANCE	
Normal tooth force (Ft_normal)	73 kN
Maximum tooth force (Ft_max)	146 kN
MISCELLANEOUS	
Raceway Pitch Diameter (DL)	941 mm
Lubrication Zerk Count (G)	4
PERFORMANCE RATINGS	
Rating Tooth Force Normal	73 kN | Not simultaneous with other listed dynamic ratings

Complete Product Data

All values below are generated from the current public verified replacement record. Source values are retained and metric references are shown where available.

PERFORMANCE RATINGS (CONTINUED)	
Rating Tooth Force Max	146 kN | Not simultaneous with other listed dynamic ratings
MOUNTING INTERFACES	
Outer ring mounting	36 holes - de 21 mm
Inner ring mounting	36 holes - di 21 mm
GEAR INTERFACE	
Pitch system	module
Module reference	10 mm
Number of teeth	108
SOURCE TRACEABILITY	
Source document code	TIBET_MAKINA_2015_CATALOG
Source file	tibet_makina_2015.pdf
PDF page	42
Printed page	42
Source language	TR-EN
Original unit system	Metric
PUBLISHED TECHNICAL MEDIA	
Load Curve Chart	double_row_ball_external-static-load-curve.webp | SHA-256: 357cdb87e15892daa440b2f6af97228273aaca78e0be674f70bc46a7c60b0426
Outline Drawing	double_row_ball_external-drawing.webp | SHA-256: 92ca88491485aba11901fbb06203f6b91361eeaaeab6b4d9a4169cfe7e7ef900

Published Load / Performance Chart

Use the published chart as a preliminary selection aid only. The model legend, curve family and source document must be reviewed together with the operating load case.

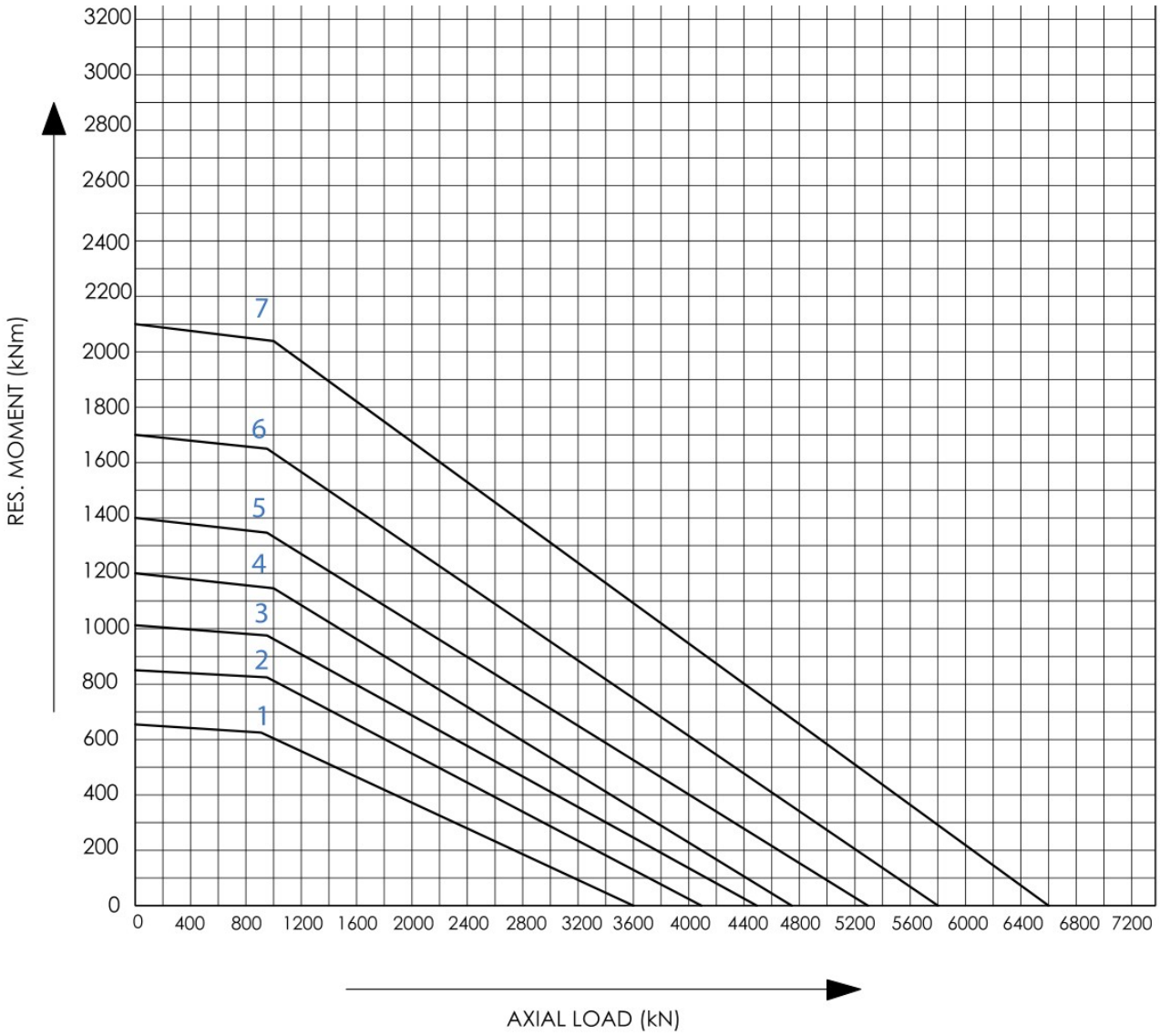

double_row_ball_external-static-load-curve.webp | SHA-256: 357cdb87e15892daa440b2f6af97228273aaca78e0be674f70bc46a7c60b0426

Engineering note: final approval must also consider mounting rigidity, bolt capacity, duty cycle, lubrication, temperature, environment and installation conditions.

Source and Verification Traceability

PUBLIC RECORD UID

77NR7QTIK7WA6THMAWAMB6M4TX

SOURCE DOCUMENT

TIBET_MAKINA_2015_CATALOG

SOURCE FILE

tibet_makina_2015.pdf

SOURCE LOCATION

PDF page 42 | Printed page 42

VERIFICATION

Level 3 - MERYDOM Engineering Verified

REVIEWED BY

MERYDOM Engineering Department

Engineering Confirmation Boundary

1. Confirm the exact model designation and all installation-envelope dimensions.
2. Confirm mounting-hole quantity, bolt circle, hole specification, bolt grade and preload.
3. Confirm gear arrangement, pitch system, tooth count, backlash and mating-pinion data.
4. Confirm axial, radial and moment loads, load combinations, duty cycle and required life.
5. Confirm support flatness and stiffness, lubrication, sealing, temperature and environment.
6. Final drawing revision, manufacturing tolerances and documentation package are confirmed with the quotation.

Request Price, Delivery and Final Engineering Confirmation

Email: jovi@merydom.com | Email: andi@merydom.com | WhatsApp: +86 17705201170

Product page: https://rotnex.com/tr/urunler/muadil-doner-tabla-rulmanlari/tibet-makina/0941e-12b-200/

Trademark and legal notice: referenced brand and model names are used only for identification and cross-reference. MERYDOM is an independent manufacturer and is not affiliated with or endorsed by the referenced brand unless expressly stated.